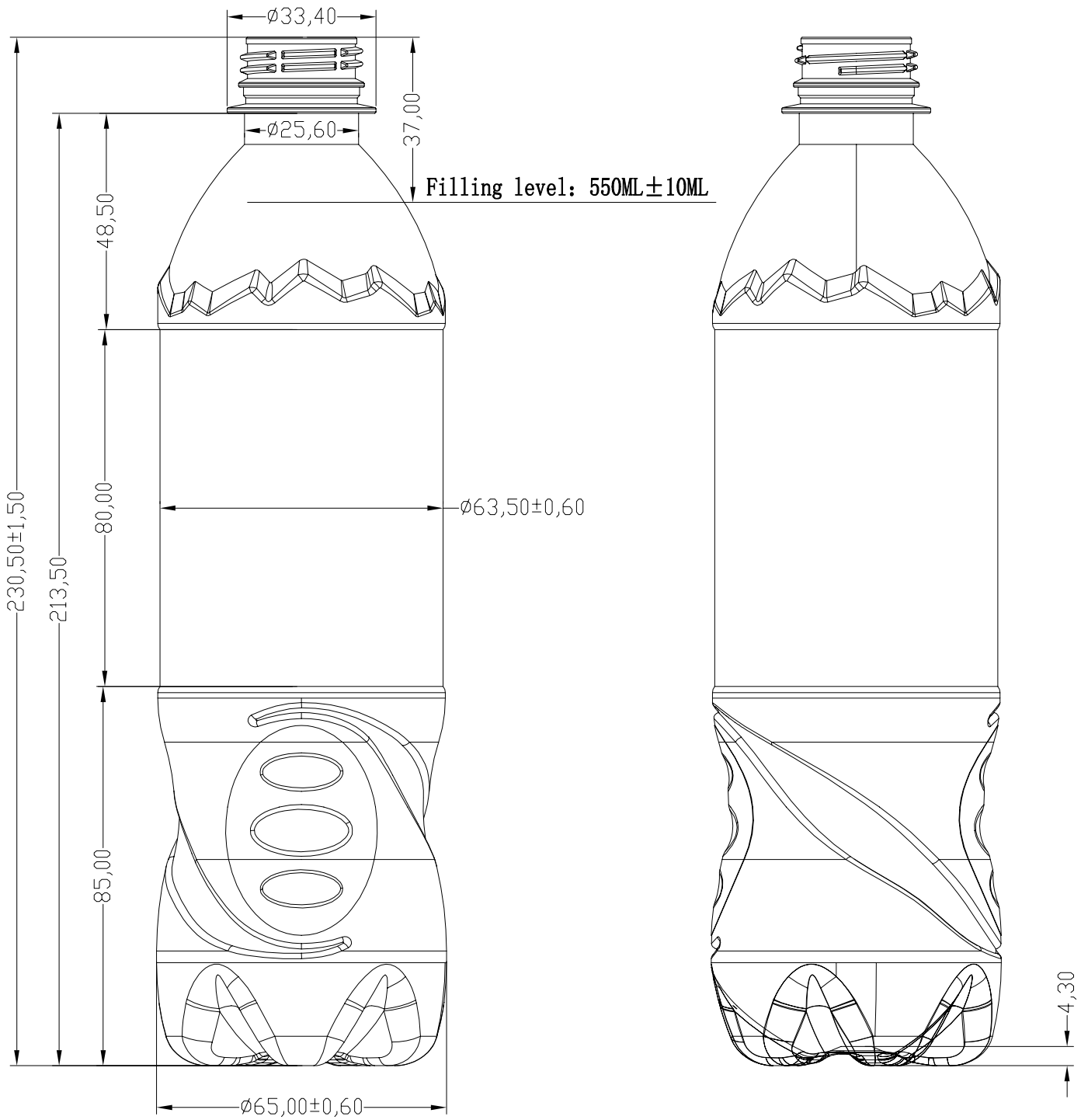

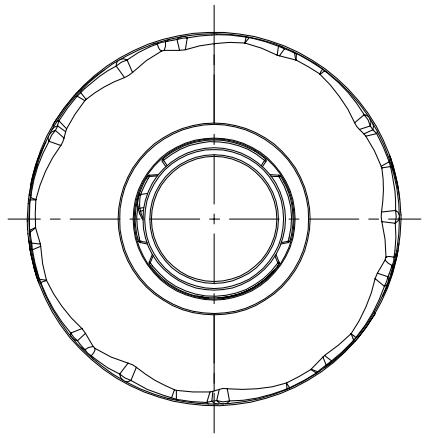

TOP VIEW

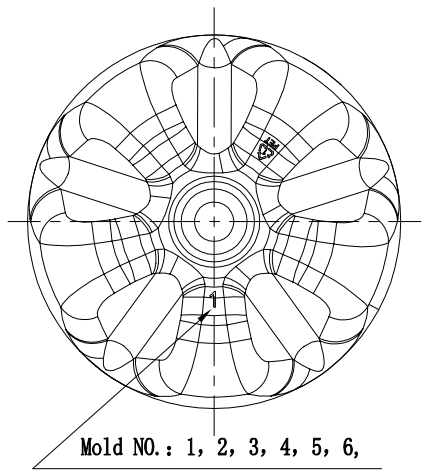

BOTTOM VIEW

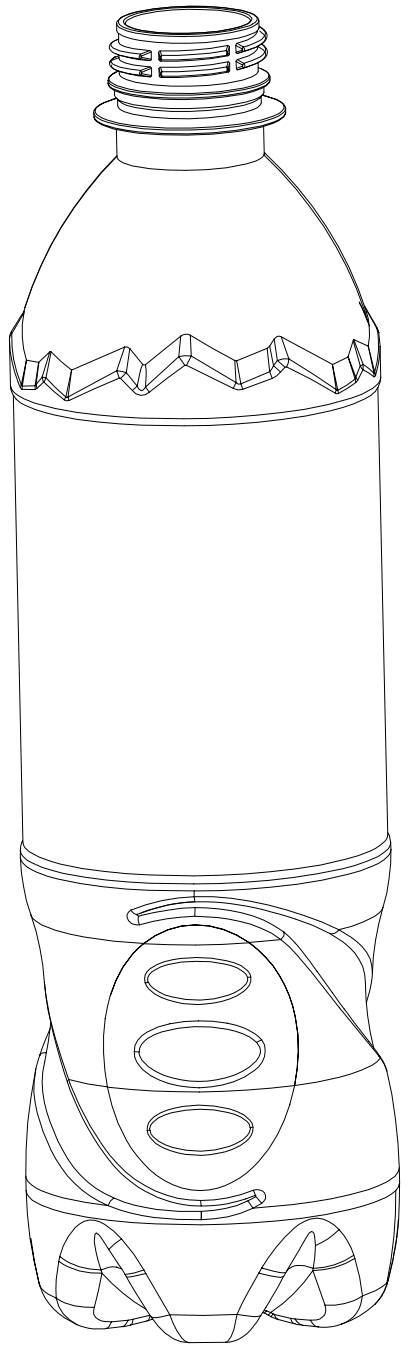

3D VIEW

Notice: once you confirm this bottle drawing, it will be your exclusive bottle design, and then we will start the official mold production and can not be changed anymore.

Neck		Filling pressure	Ordinary pressure	Name	550ML bottle design
Volume	550ml	Filling temperature	Room temperature	Draw No.	LX2025080701-M02
Material	PET	Weight			
Level		Package			